GH3781QR_20080911

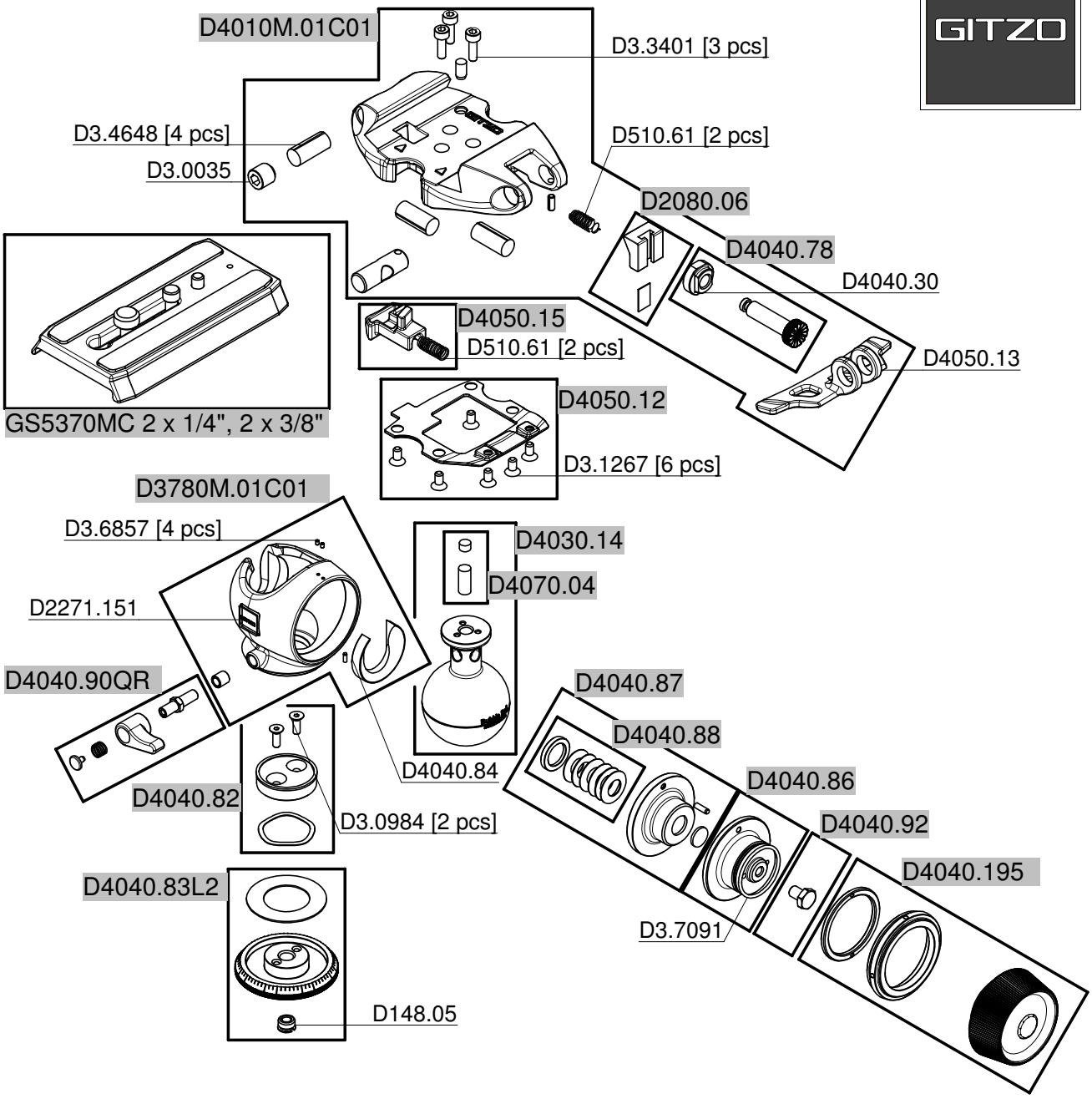

GH3781QR

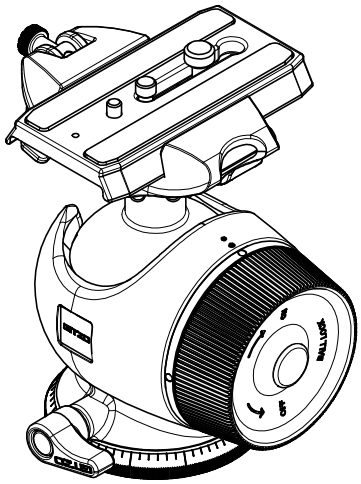

For serial numbers from GZ066001