G2257_20050901

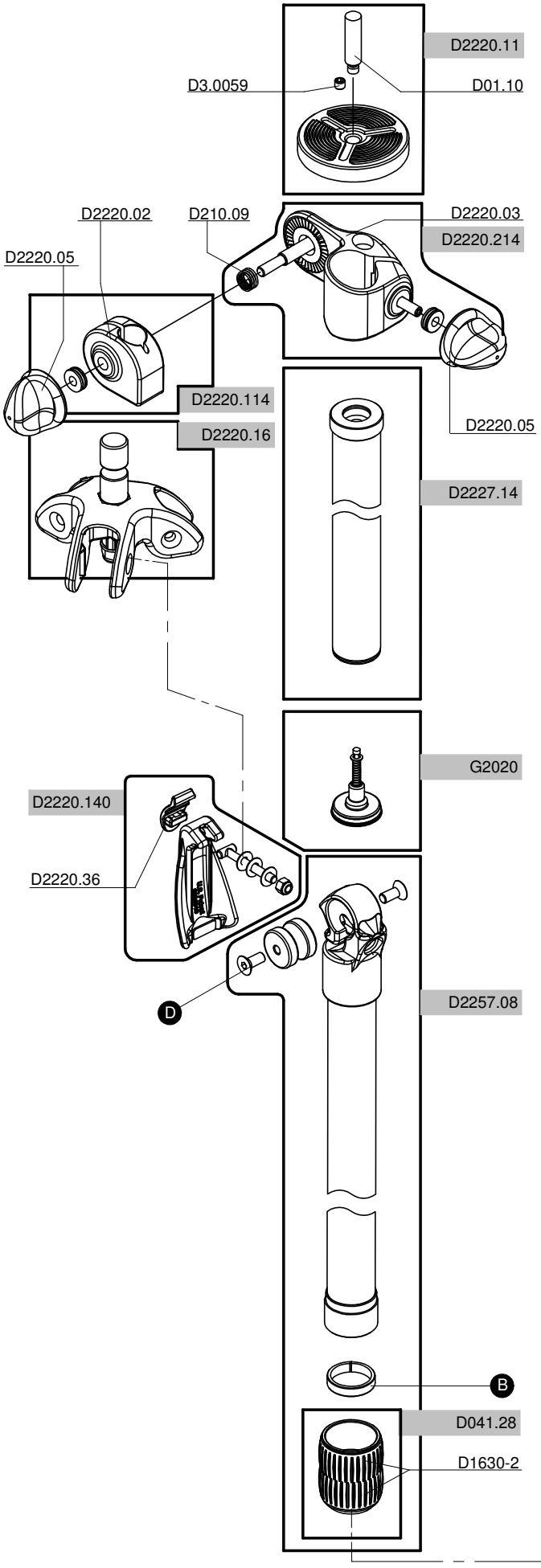

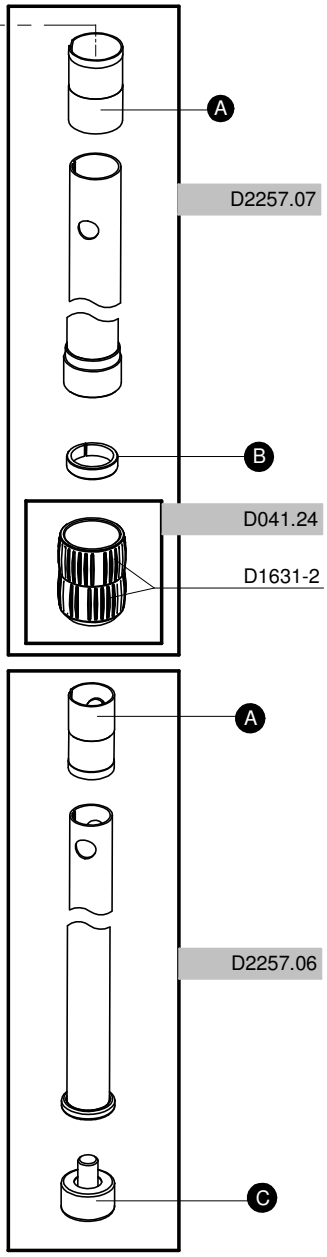

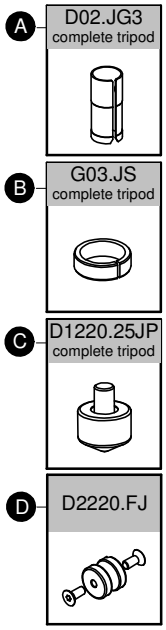

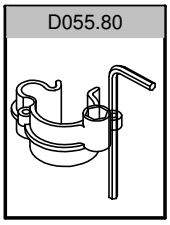

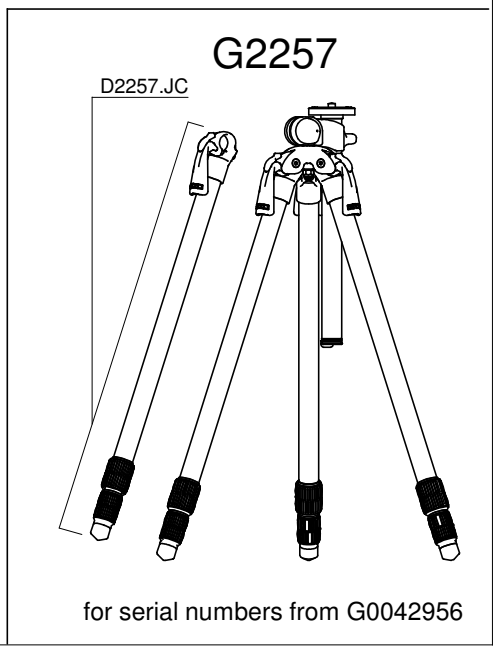

for serial numbers from G0042956