G1376M_20040630

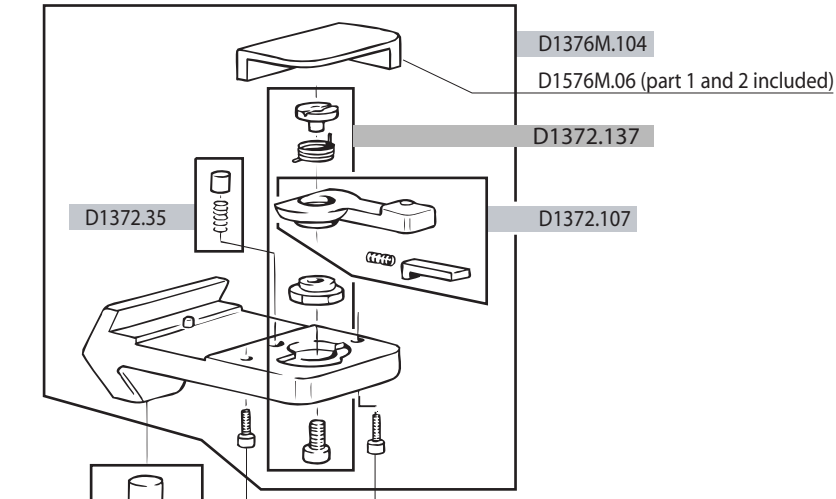

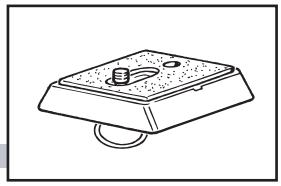

G1373/14 (1/4')

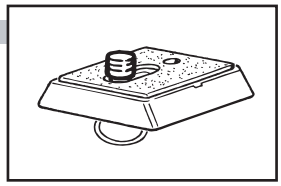

G1373/38 (3/8')

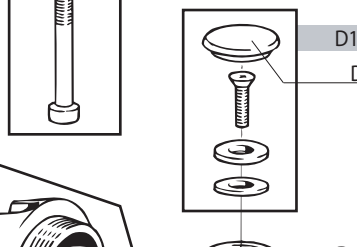

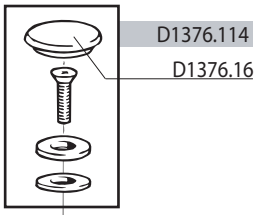

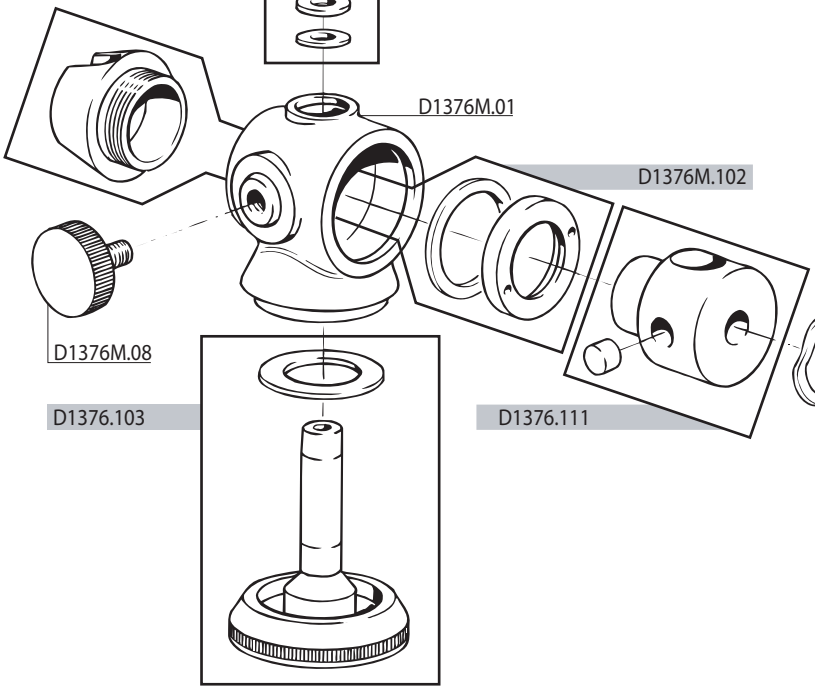

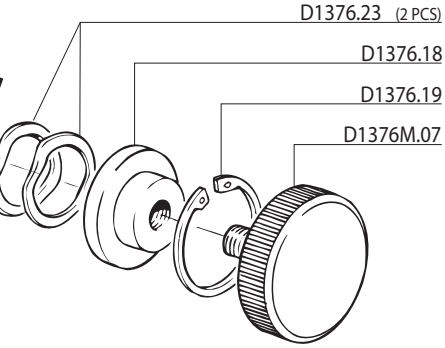

G1376M

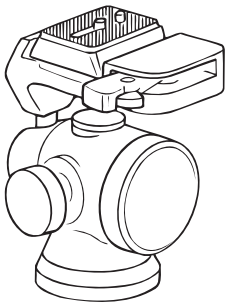

for serial numbers from H0060462