G1276MNA - 20040629

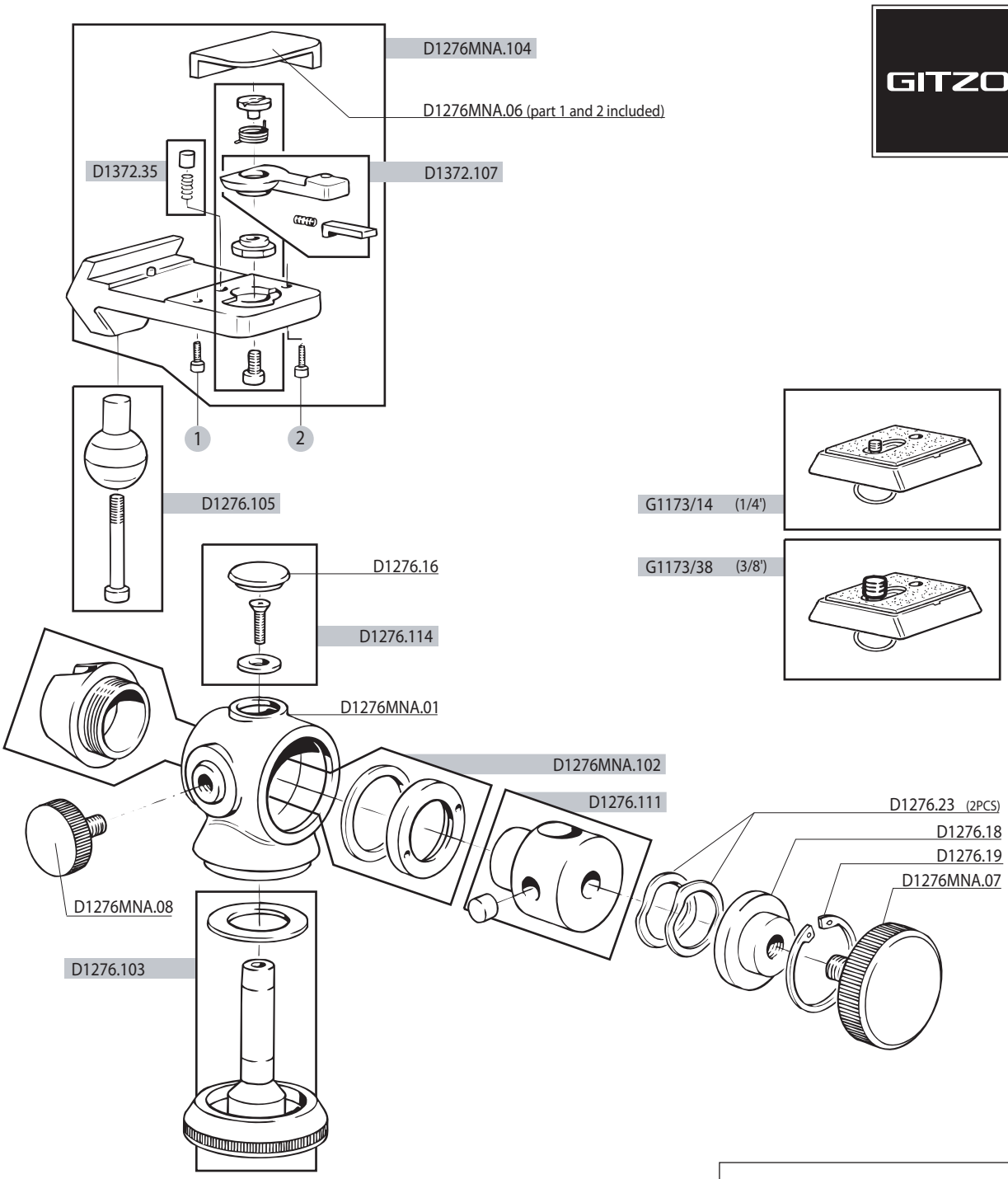

G1276MNA

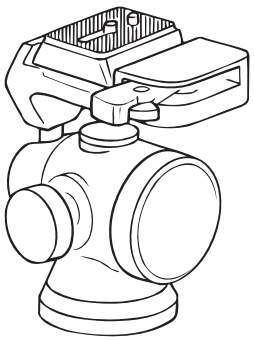

for serial numbers from H0060682