2007-10-16

AVENGER
part of Manfrotto
PROFESSIONAL CINE EQUIPMENT

ART. C595

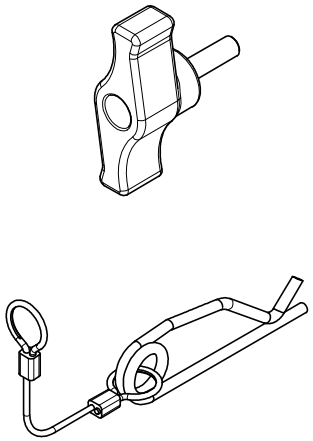

RC02004

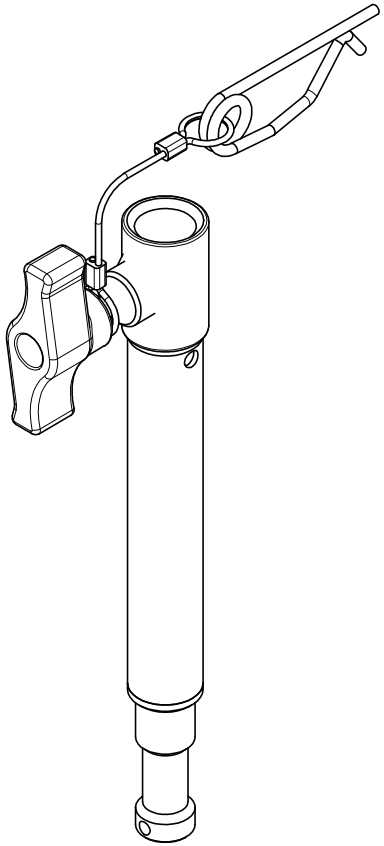

RC595,01

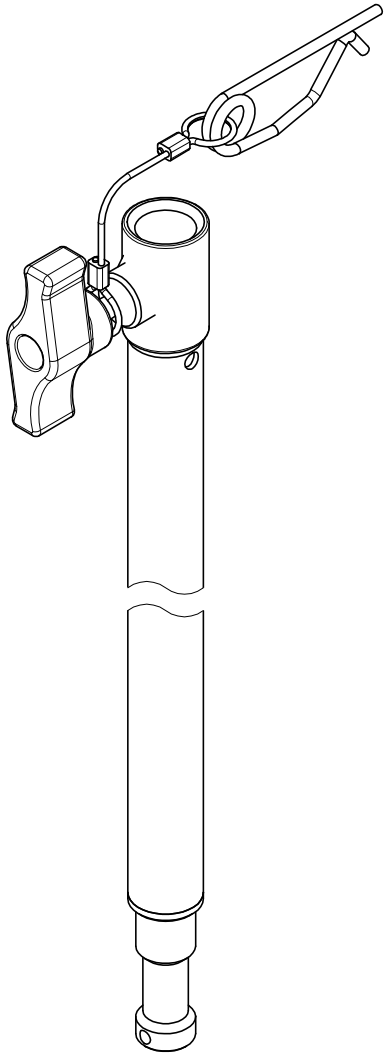

RC595,02

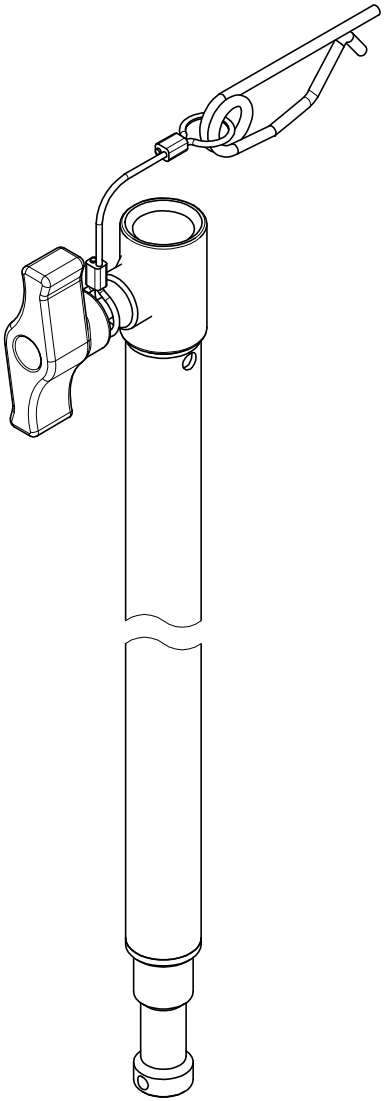

RC595,03