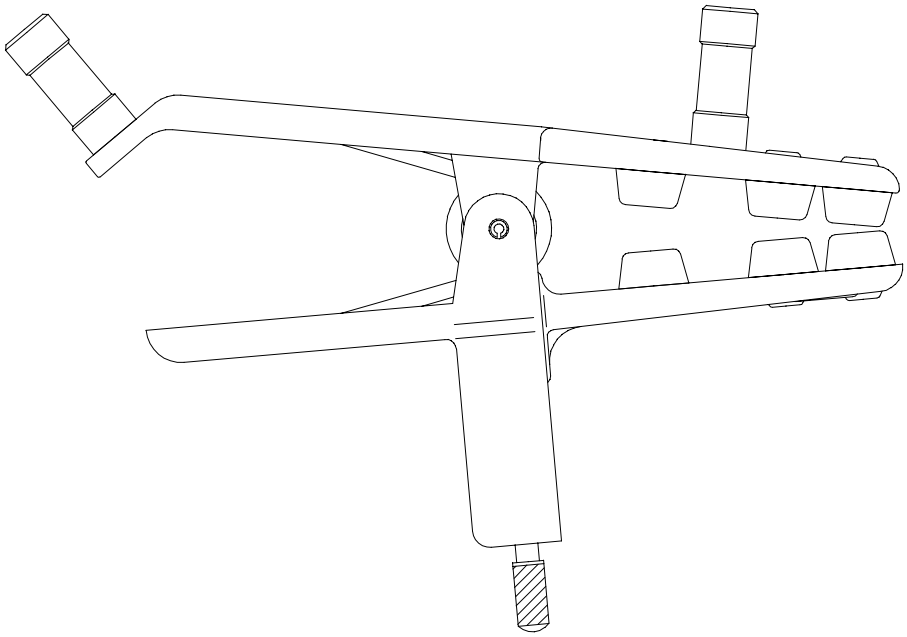

Made by **Avenger** srl Feltre Italy

Avenger
Studio Equipment - srl
Spare Parts List

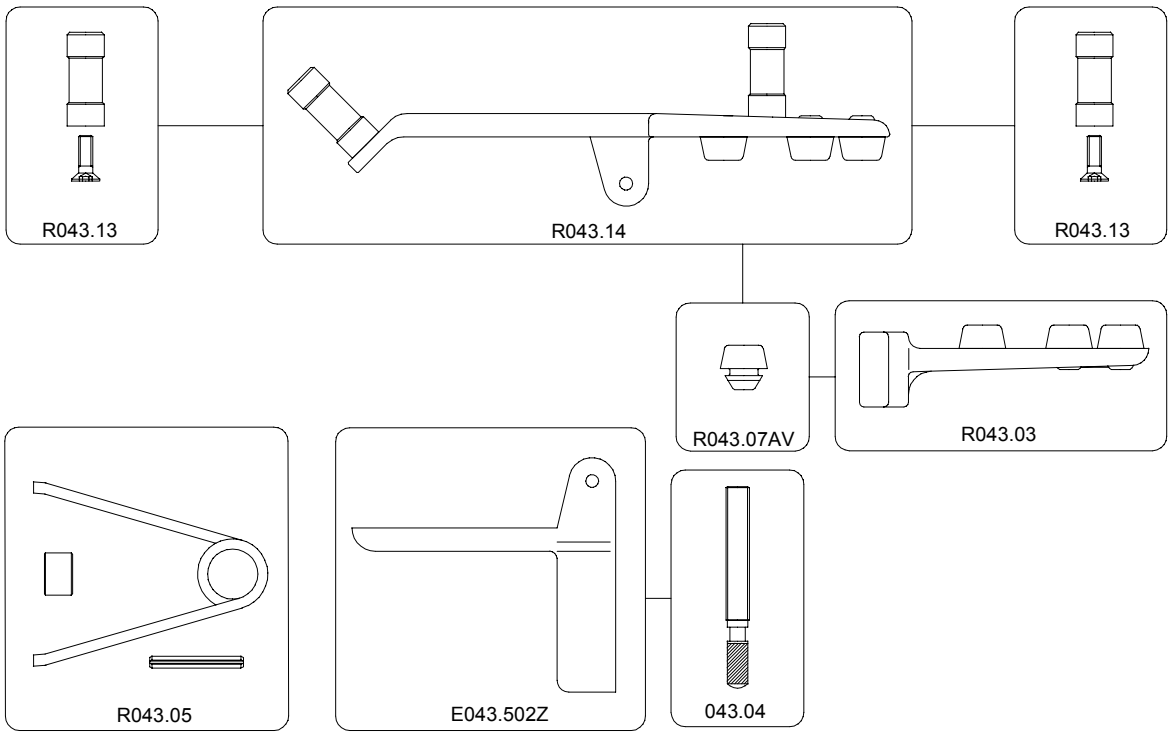

C1525

VERSION: 002
1995-08-22