2009-07-01

AVENGER

PROFESSIONAL CINE EQUIPMENT

ART. B7034POLE
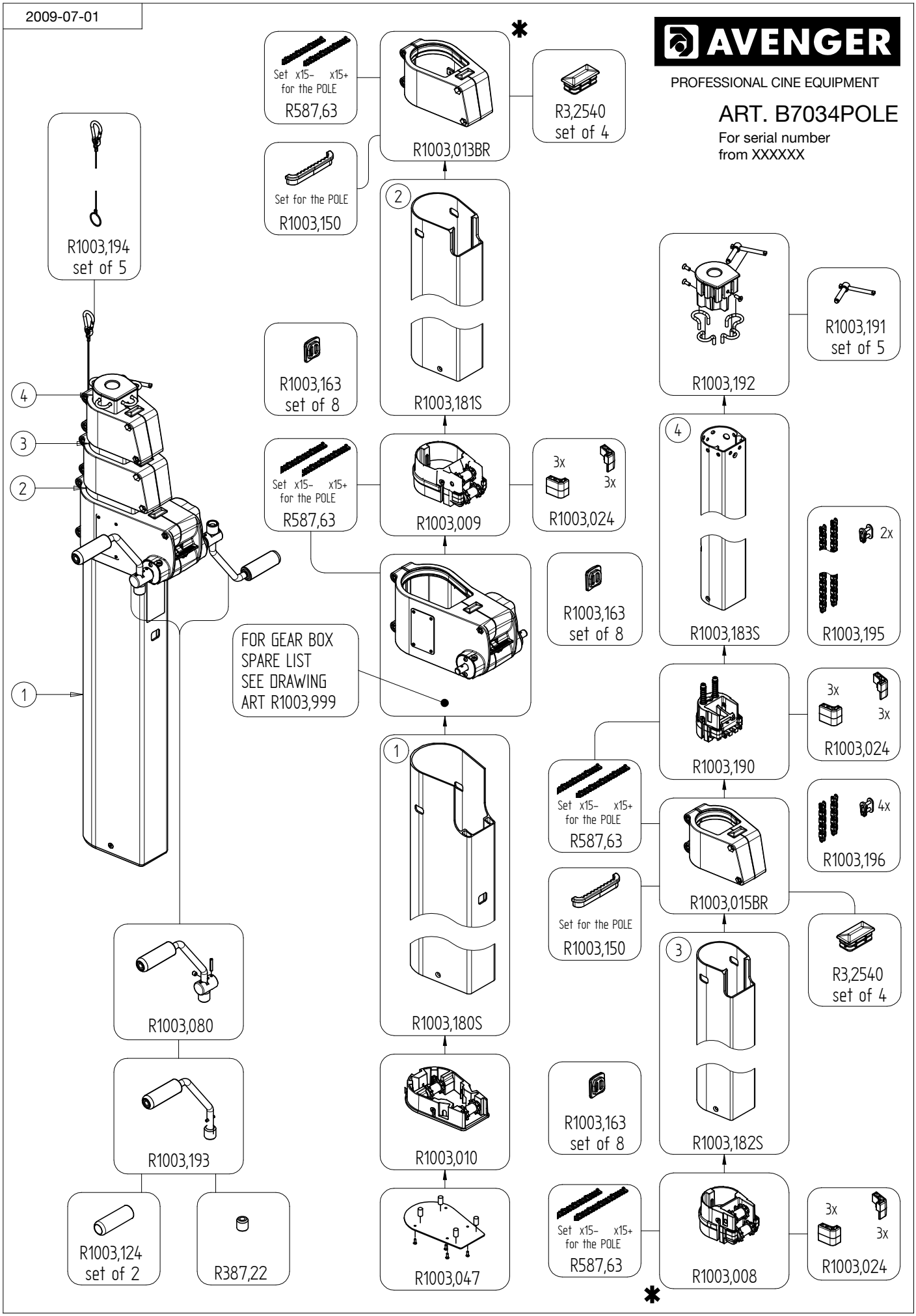
For serial number
from XXXXXX