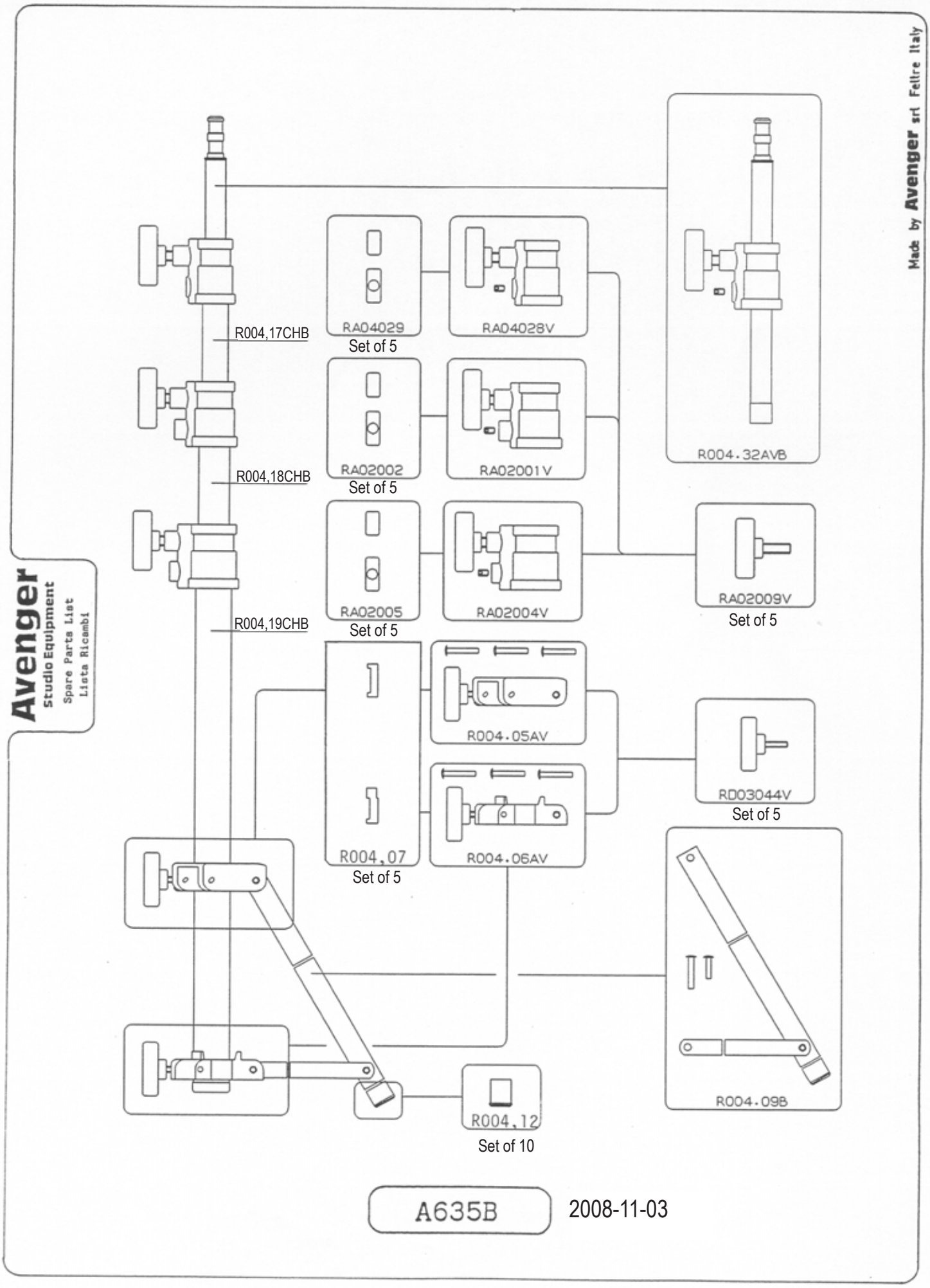
Made by Avenger srl Feltre Italy
Avenger
Studio Equipment
Spare Parts List
Lista Ricambi
R004,17CHB
R004,18CHB
R004,19CHB
RA04029
Set of 5
RA04028V
RA02002
Set of 5
RA02001V
RA02005
Set of 5
RA02004V
R004.32AVB
RA02009V
Set of 5
R004,07
Set of 5
R004.05AV
R004.06AV
RD03044V
Set of 5
R004.09B
R004,12
Set of 10
A635B
2008-11-03