G1515 20051114

GITZO

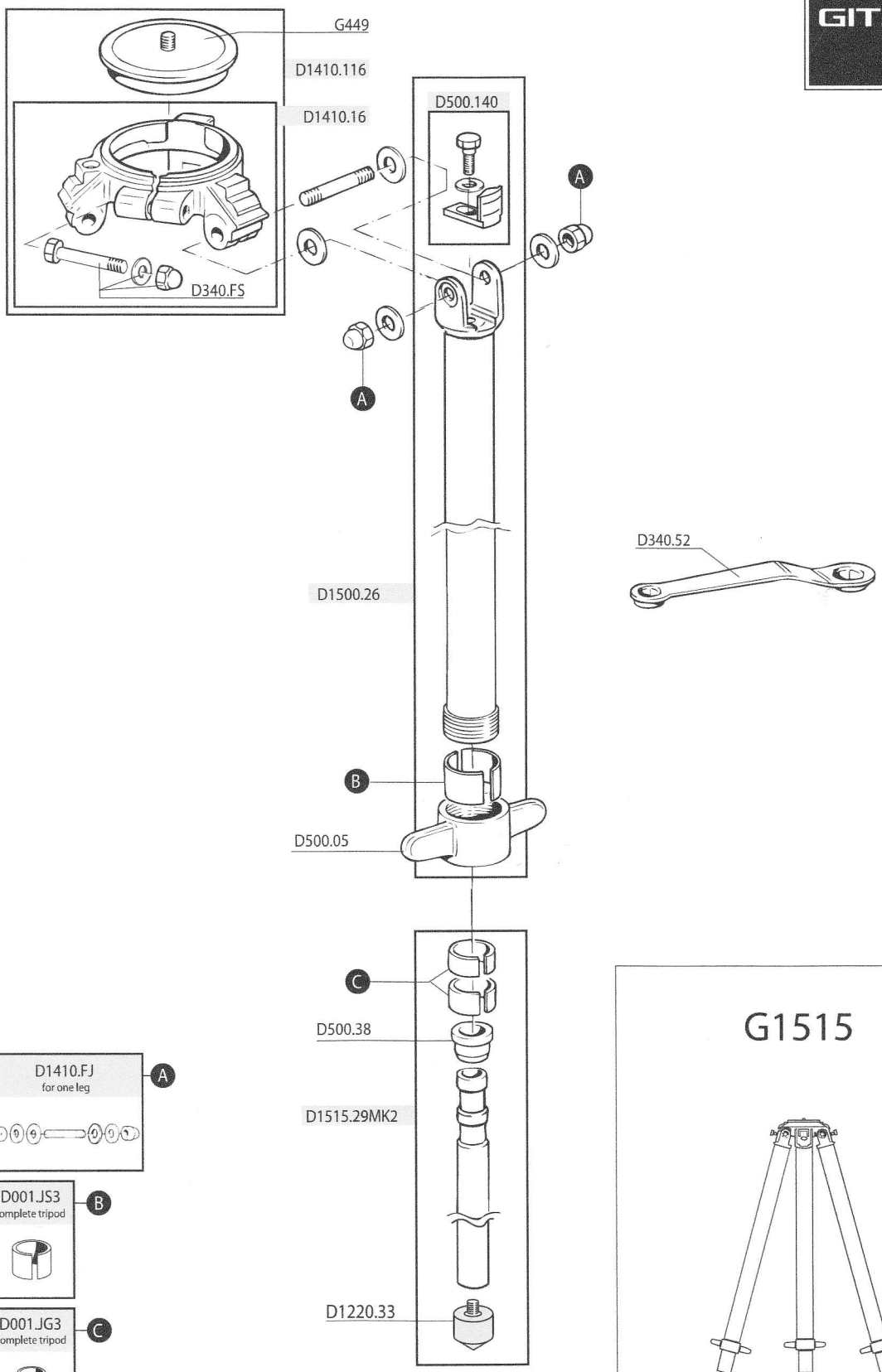

G1515

for serial numbers from G0055036